Metris
Single lever bidet mixer with pop-up waste set
Surfaces: **chrome** Article Number: **31280000**

Description

product features

- projection 123 mm
- ball-point joint: ball-pivot joint
- laminar spray
- flow rate: 7.2 l/min
- pop-up waste set
- suitable for continous flow water heaters

Product image
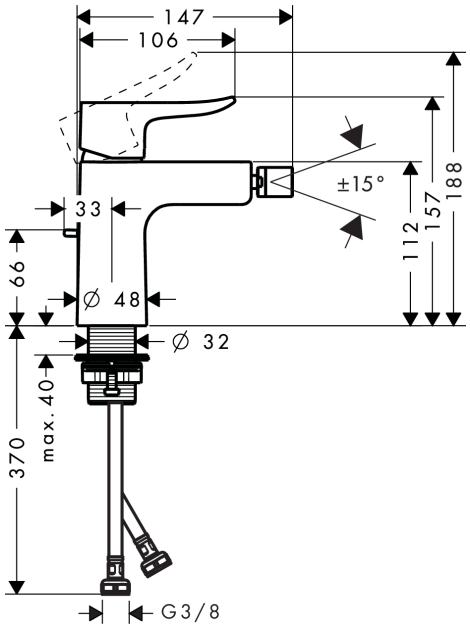
Scale drawing