Raindance Select S
Showerpipe 240 2jet with thermostat
Surfaces: **chrome** Article Number: **27129000**

Description

product features

- maximum flow rate (at 0.3 MPa): 15 l/min
- overhead shower Raindance Select S 240 2jet
- shower head size: 240 mm
- spray type: RainAir (rain spray enriched with air), Rain
- convenient diversion via Select button
- operating pressure: min. 0.15 MPa/max. 1.0 MPa
- spray disc surface in two variants: chrome or white
- shower arm length: 460 mm
- swivel shower arm
- thermostat Ecostat Comfort
- safety lock at 40° C
- adjustable hot water limitation
- outlets controlled via turning handle
- installation type: exposed installation
- height-adjustable hand shower holder
- suitable for continuous flow water heaters with an output of 18 kW

Technology

Product image
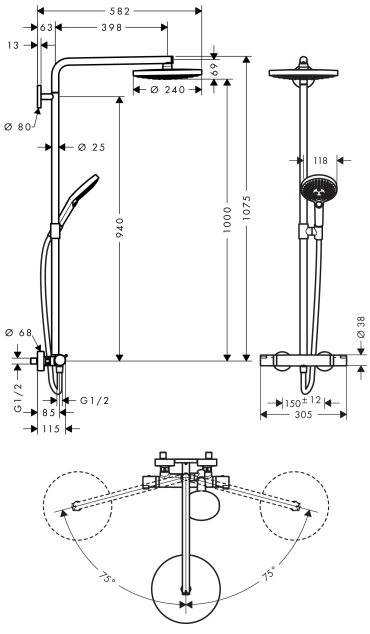
Scale drawing